ROBOTZONE

MODEL NUMBER
#638366

DIRECTION OF ROTATION

SPECIFICATIONS

DC Planetary Gear Brush Motor

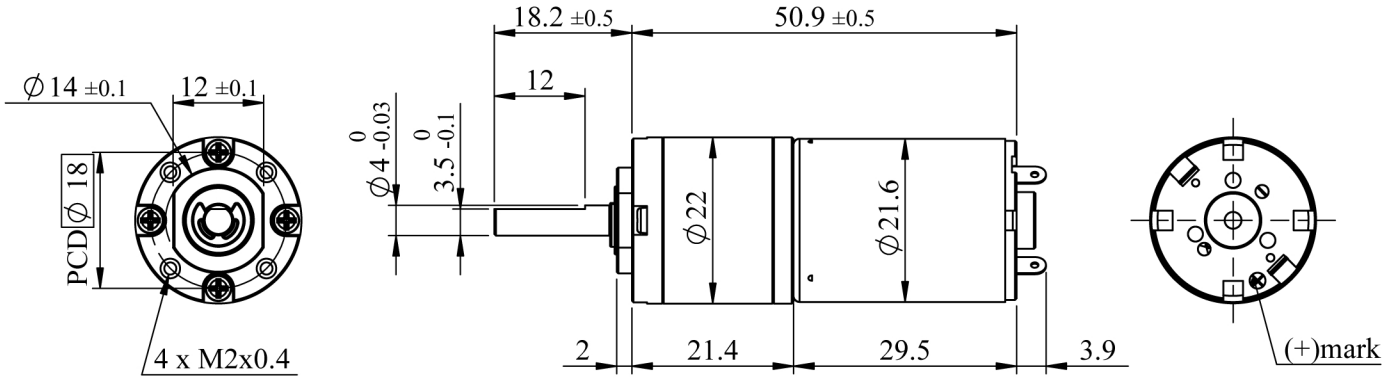

(unit:mm)

A. Operating Conditions:

1	Operating Voltage Range	6~12	VDC	4	Operating Temperature	-10~+60	℃
2	Rated Voltage	12	VDC	5	Storage Temperature	-30~+85	℃
3	Rated Load	1.6	kgf-cm	6	Test Position	Horizontal	~

B. Electrical Characteristics:

1	Max. No-load Current	0.26	A	6	Max. Stall Current	9.7	A
2	No-load Speed	350±35	rpm	7	Insulation Resist.(500V)	20	MΩ
3	Rated-load Current	1.0	A	8	Dielectric Strength	250	VAC
4	Rated-load Speed	300±30	rpm	9	Motor Brush Type	Graphite	~
5	Min. Stall Torque	5.7	kgf-cm	10	Output Power at Max.Eff.	4.9	W

C. Mechanical Characteristics:

1	Gear Type	Planetary	~	7	Max. Shaft Radial Load	1.5	kgf
2	Gear Ratio	1/43	~	8	Max. Shaft Runout	0.05	mm
3	Gear Material	Metal	~	9	Max. Shaft End Play	0.20	mm
4	Rated Tolerance Torque	4	kgf-cm	10	Bearing Type	Dual Ball	~
5	Moment. Tolerance Torque	8	kgf-cm	11	Net Weight	92±5	grams
6	Max. Shaft Axial Load	1.0	kgf				