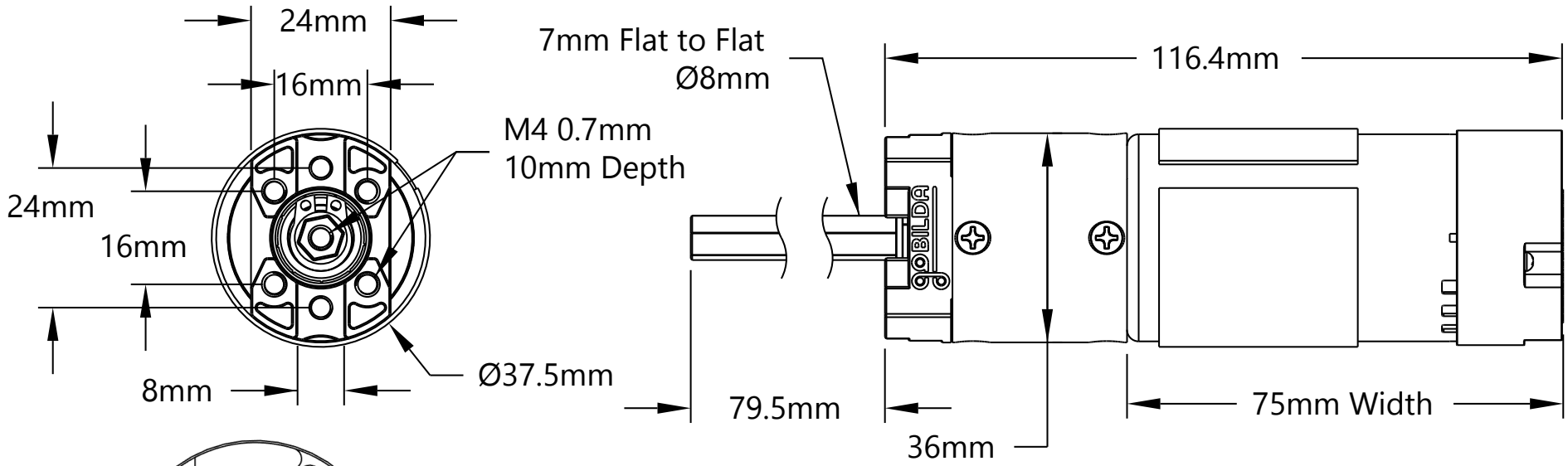

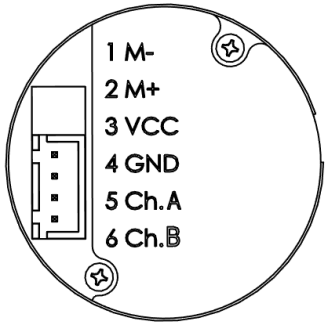

FIRST TECH CHALLENGE LEGAL

SKU: 5204-8002-0027
Gearbox Style: Planetary
No-Load Speed @ 12VDC: 223 RPM
No-Load Current @ 12VDC: 0.25A
Stall Torque @ 12VDC: 38.0 kg.cm (530 oz-in.)
Stall Current @ 12VDC: 9.2A
Gear Ratio: 26.9:1
Gear Material: Steel
Output Shaft Support: Dual Ball Bearing
Motor Size: RS-555
Weight: 458g
Wire Length: 470mm with 3.5mm Male Bullet Connectors
Encoder Shaft: 28 Pulses per Rotation (7 Cycles)
Gearbox Output Shaft: 751.8 Pulses per Rotation (134.4 Cycles)

Patents Pending